TVWM5530BK
INSTALLATION MANUAL

max.30kg

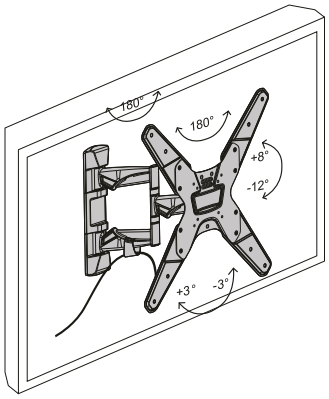

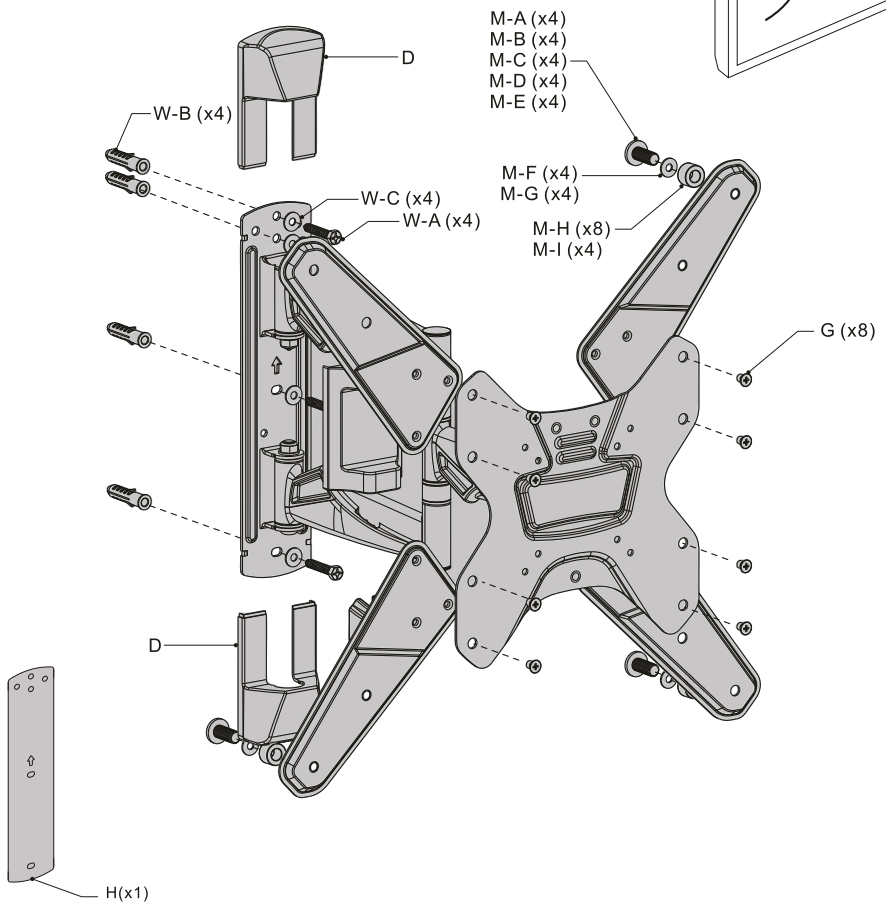

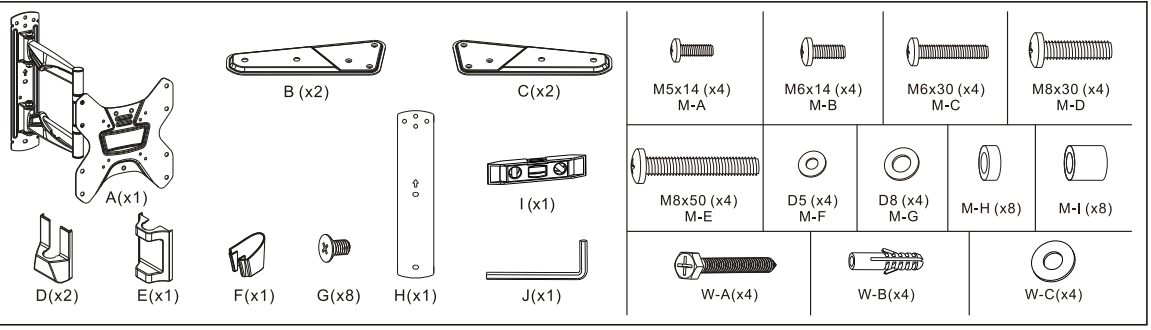

Nedis B.V., Reitscheweg 1,
5232 BX 's-Hertogenbosch,
the Netherlands - service@nedis.com

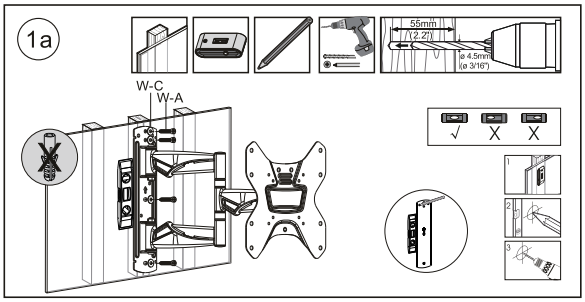
1a
55mm
(2.2")
ø 4.5mm
(ø 3/16")
W-C
W-A
√ X X

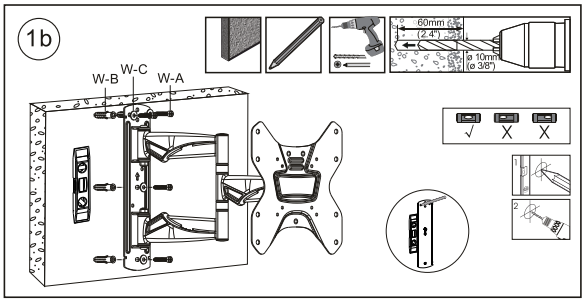
1b
60mm
(2.4")
ø 10mm
(ø 3/8")
W-B
W-C
W-A
√ X X

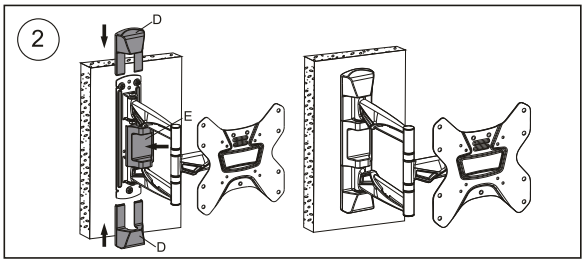
2
D
E
D

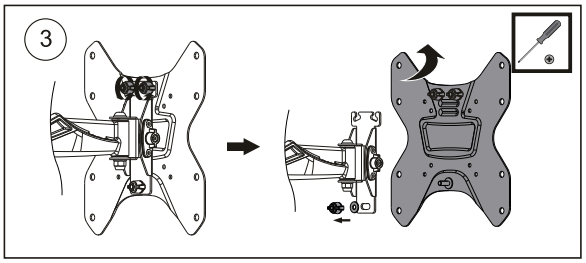
3

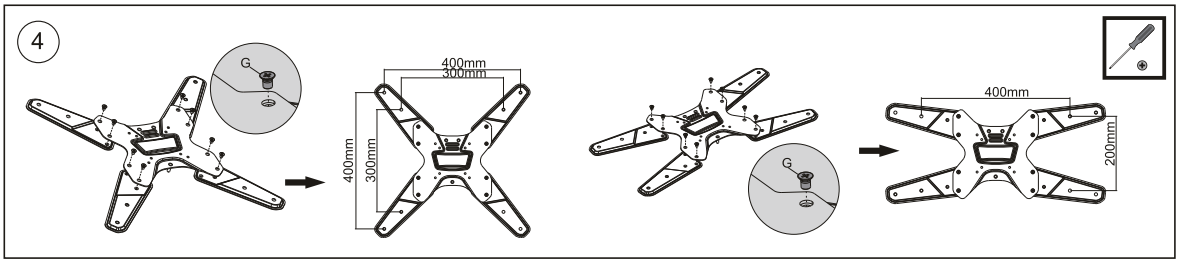
4
G
400mm
300mm
400mm
300mm
G
400mm
200mm

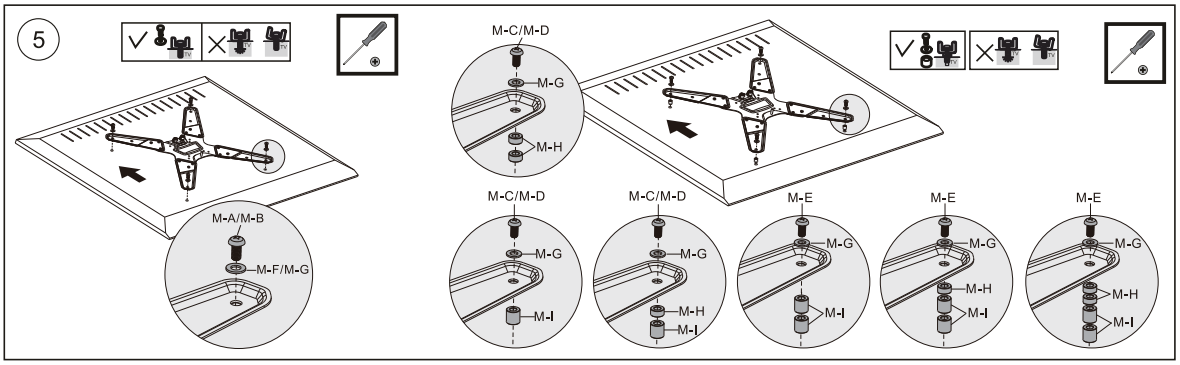
5
M-C/M-D
M-G
M-H
M-A/M-B
M-F/M-G
M-C/M-D
M-G
M-I
M-C/M-D
M-G
M-H
M-I
M-E
M-G
M-I
M-E
M-G
M-H
M-I
M-E
M-G
M-H
M-I

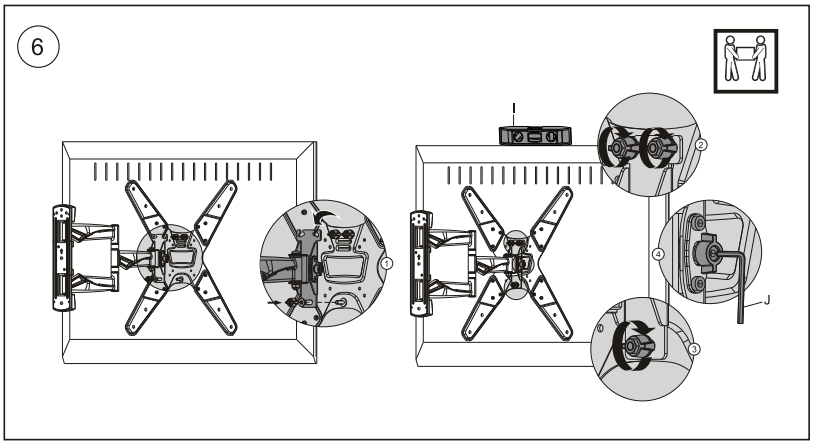
6
I
J

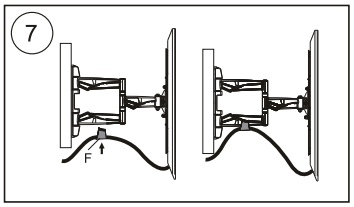
7
F

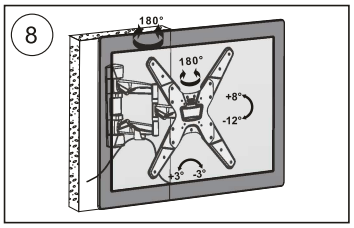
8
180°
180°
+8°
-12°
+3°
-3°